MOTORIZED ANTENNA MOUNT
STYLE - 9187-MM

4-WAY ANTENNA MOUNT

Engineered for dependable performance and effortless efficiency, Shakespeare's Marine Motorized Mount delivers unmatched control and reliability for demanding marine environments. Designed with marine-grade materials and sealed for all-weather performance, this rugged mount ensures long-term durability even in the harshest saltwater conditions.

Its motorized tilt system allows antennas to be raised or lowered, while minimizing the need for manual handling. With sleek design, shock-resistant construction, and effortless push button operation,the Marine Motorized Mount is the ideal solution for convenient, secure antenna deployment on any vessel.

BUILT FOR THE MARINE ENVIRONMENT.

Premium Stainless Steel Construction. Push-Button Convenience.

SHAKESPEARE®

MOTORIZED ANTENNA MOUNT

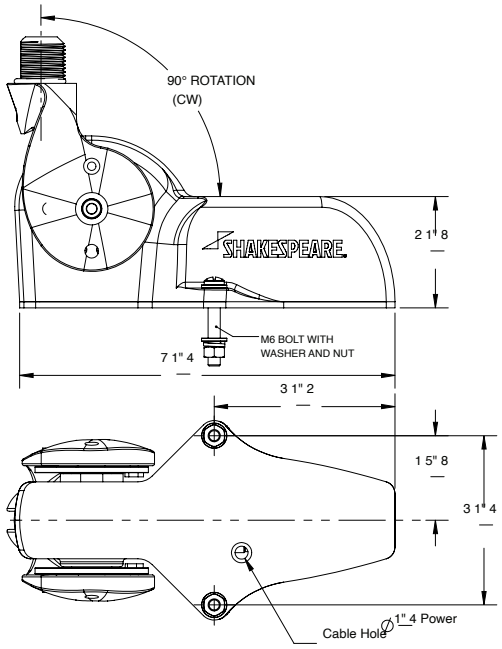

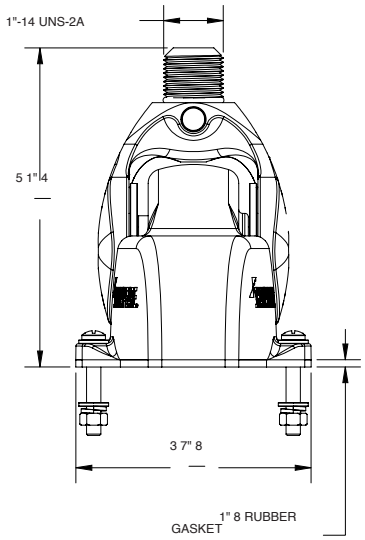

APPLICATIONS:

- Small Craft Boats
- Yachts
- Ships

FEATURES/BENEFITS:

- Full 0° to 90° Range of Motion
- Corrosion-Resistant 316 Stainless Steel
- Push-Button Raise & Lower Operation
- Enclosed Gear Drive for Extended Service Life
- 10" Cable for Installation (Switch NOT Included)
- Low Power Draw (<1.5 Amps)
- Withstands Harsh Saltwater Environments
- Universal Antenna Compatibility with All Standard 1"-14 Marine Antennas up to 8"
- Supports 12V Electrical Systems
- FCC/CE Certified

SPECIFICATIONS:

Model Number	Description	UPC
9187-MM	Motorized mount, stainless steel, 0-90 degree	719441111526

LEARN MORE: SCAN QR
https://shakespeare-marine.com/product/motorized-antenna-mount/

SHAKESPEARE®
shakespeare-marine.com
803-754-7011